MURR ELEKTRONIK
stay connected

**M12 Power female 0° L-cod. screw terminal**

5-pol., max. 2,5mm², 8 - 13mm

Female straight
M12
5-pole
L-coded
Screw terminals
Sealing range (cable Ø)
8...13 mm
The resistance to aggressive media should be individually tested for your application. Further details on request.

Link to Product

**Illustration**

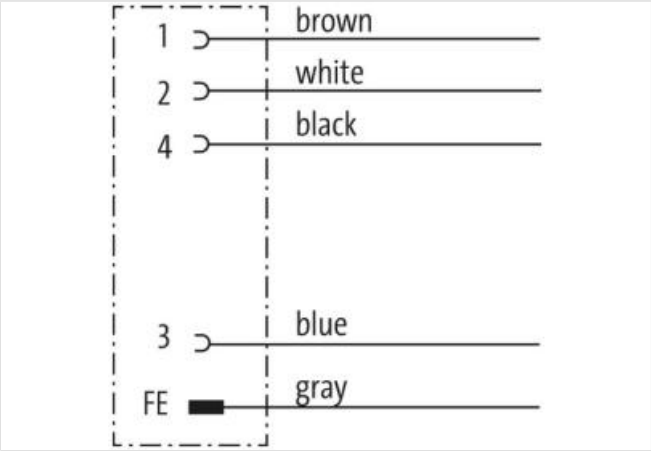


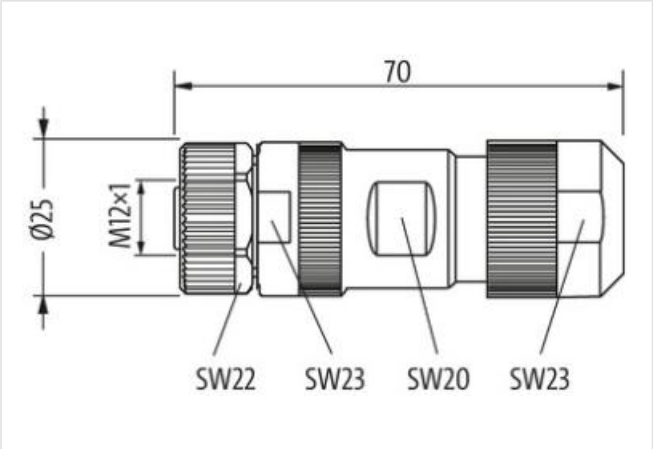


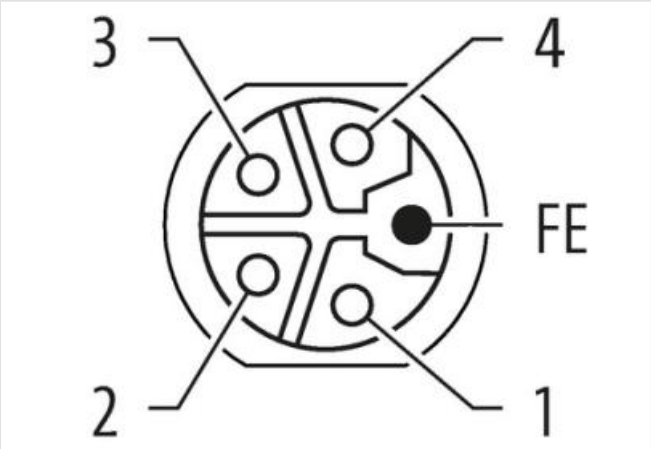


Product may differ from Image

**Side 1**

| | |
|---|---|
| Family construction form | M12P |
| Coding | L |

| | |
|---|---|
| Material contact | Copper alloy |
| **Commercial data** | |
| ECLASS-6.0 | 27279221 |
| ECLASS-6.1 | 27260702 |
| ECLASS-7.0 | 27440102 |
| ECLASS-8.0 | 27440102 |
| ECLASS-9.0 | 27440116 |
| ECLASS-10.1 | 27440102 |
| ECLASS-11.1 | 27440102 |
| ECLASS-12.0 | 27440116 |
| ETIM-5.0 | EC002635 |
| customs tariff number | 85366990 |
| GTIN | 4048879786560 |
| Packaging unit | 1 |
| **Electrical data \| Supply** | |
| Operating voltage AC max. | 63 V |
| Operating voltage DC max. | 63 V |
| Current operating per contact max. | 16 A |
| **Installation** | |
| Connection cross section max. | 2,5 mm² |
| AWG number max. | 14 |
| **Installation \| Connection** | |
| Connection | Screw terminals SK |
| Mounting set | M12 x 1 |
| Mating cycles min. | 100 |
| **Device protection \| Electrical** | |
| Degree of protection (EN IEC 60529) | IP67 |
| Additional condition protection degree | inserted, screwed |
| Pollution Degree | 3 |
| Rated surge voltage | 1,5 kV |
| Material group (IEC 60664-1) | II |
| Overvoltage category (EN 60950-1) | III |
| **Mechanical data \| Material data** | |
| Coating contact | gold plated |
| Material housing | PA |
| Material contact carrier | PA |
| **Mechanical data \| Mounting data** | |
| Mounting method | Schraubgewinde |
| Clamping range min. | 8 mm |
| Clamping range max. | 13 mm |
| **Environmental characteristics \| Climatic** | |
| Operating temperature min. | -40 °C |
| Operating temperature max. | 85 °C |
| **Important installation notes** | |
| Note on strain relief | Protect the connectors by suitable measures from mechanical loads, e.g. by the usage of cable ties. |
| Note on bending radius | **Attention:** Observe the permissible bending radii when laying cables, as the IP protection class can be endangered by excessive bending forces. |